HELIOS™

Model T2642 Wall Mount

Television Wall Mount with Tilt Option

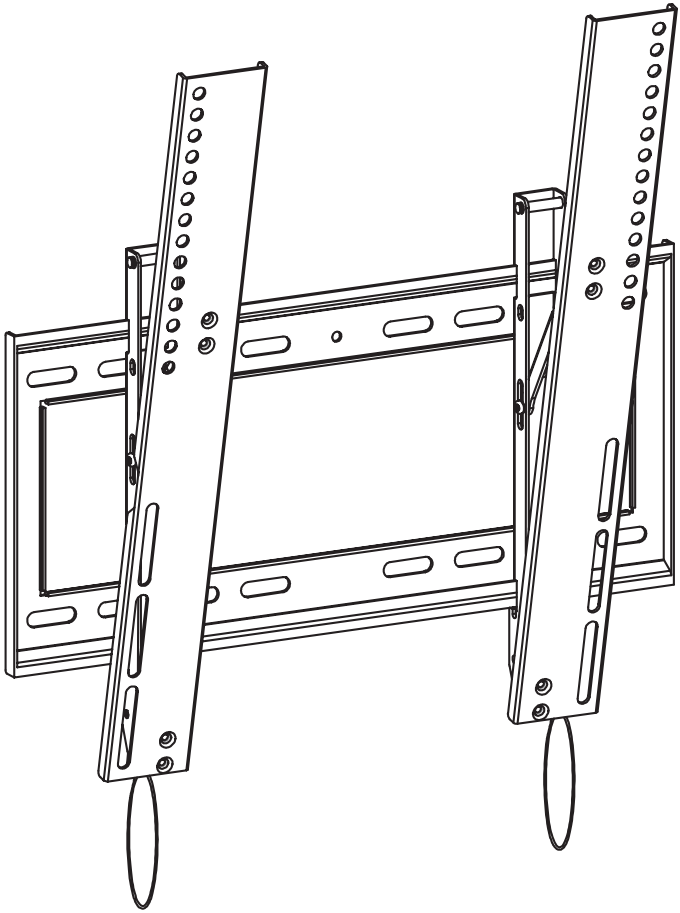

GETTING STARTED

Introduction

Congratulations on the purchase of your new Helios T2642 Television Wall Mount. For maximum benefit, please read the entire manual before beginning installation.

NOTE: This model has been designed to work with most 26 to 42 inch Plasma, LCD and LED televisions with a maximum weight of 70lbs (35kg).

Safety Instructions

Please read this entire manual carefully before mounting this bracket to avoid bodily injury and/or any property loss. If you do not understand these directions, or have any doubts about the safety of the installation, please call a qualified contractor or contact the Helios customer service department @ 1-866-839-9187. Please check carefully to ensure there are no missing or defective parts. Our customer representatives can quickly assist you with installation questions and missing or defective parts. Replacement parts for products purchased through authorized dealers will be shipped to you directly. Do not attempt to use any parts not provided by the manufacturer. Using other screws could cause injury or property loss. Never use defective parts, as improper installation may cause damage or serious injury. Do not use this product for any purpose not explicitly specified by Audio Solutions. Audio Solutions cannot be liable for damage or injury caused by incorrect mounting, incorrect assembly, or incorrect use.

- Read these instructions.
- Keep these instructions.
- Heed all warnings.
- Follow all instructions.
- **Be sure to choose a wall constructed using 2x4 studs or solid concrete, or other reinforcement strong enough to support the weight of the TV. The location should be safe from hazards such as water or crushable items. DO NOT ATTEMPT TO MOUNT THIS UNIT TO A HOLLOW WALL!**

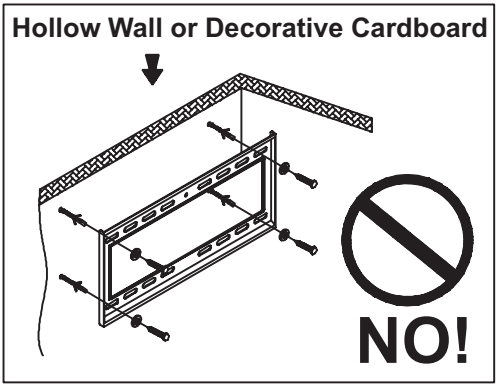

Figure 1 - Hollow Wall WARNING!

- **WARNING**: Use only the supplied screws intended for the current application to avoid personal injury or property damage.

GETTING STARTED

Opening the Package

The T2642 Wall Mount and accompanying hardware have been carefully packed in a carton designed to protect it from transportation damage. After opening the carton, check that the components are in good condition and that all listed contents are included.

Package Contents

- Wall Plate (x1)
- Bracket (x2)
- Mounting/Assembly Hardware
- Leveling Tool
- This User Manual

Mounting Instructions

Please read all enclosed instructions and verify hardware contents carefully before mounting.

GETTING STARTED

Wall Plate Mounting Hardware

#	Part Image	Description	Qty
1		Square Head Screw	4
2		Concrete Anchor	4
3		Allen Wrench	1

TV Bracket Assembly Hardware

#	Part Image	Description	Qty
A		M4 x 12 Bolt	4
B		M5 x 12 Bolt	4
C		M6 x 12 Bolt	4
D		M8 x 16 Bolt	4
E		M4 x 30 Bolt	4
F		M5 x 30 Bolt	4
G		M6 x 35 Bolt	4
H		M8 x 40 Bolt	4
I		M4/M5 Spacer	4
J		M8/M6 Spacer	4
K		M4/M5 Washer	4

#	Part Image	Description	Qty
L		M6/M8 Washer	4
M		M4 Washer	4
N		M5 Washer	4
O		M6 Washer	4
P		M8 Washer	4

INSTALLATION

STEP 1

Read and understand all of the enclosed instructions and verify that all parts are present and appear in good working order before you begin.

STEP 2

Attach the Wall Plate to the wall.

Wood Stud Mounting

The Wall Plate must be mounted, at the top and bottom, to at least 2 wooden studs, spaced a minimum of 16” apart. Locate two wooden studs and mark the center and edge locations. Position the Wall Plate over the marked wooden studs and mark for drilling. Using the correct size drill bit, pre-drill a 2.5” deep hole in each marked location. Attach the Wall Plate to the wall using the included square head screws and M8 washers (Figure 2).

NOTE: Do not use the concrete anchors illustrated in Figure 2 for wood stud mounting.

Concrete Wall Mounting

Choose a solid wall area (avoid securing the mount to mortar joints between concrete blocks or bricks). Using the correct size drill bit, pre-drill a 2.5” hole in each marked location. Insert the concrete anchor into the holes and then attach the Wall Plate to the wall using the included square head screws and M8 washers (Figure 2).

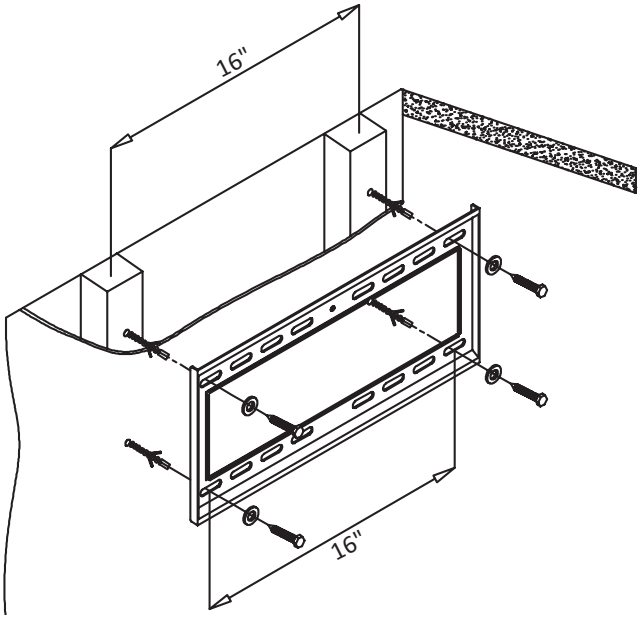

Figure 2 - Wood Stud/Concrete Mounting

INSTALLATION

STEP 3

In the hardware bag provided, locate the 4 pan head bolts that fit the thread pattern for your television. With the two vertical brackets centered on the back of the TV, gently thread the screws into the holes by hand. DO NOT USE AN ELECTRIC OR BATTERY DRILL until you are certain you have the right size thread. DO NOT OVER TIGHTEN the screws (Figure 3).

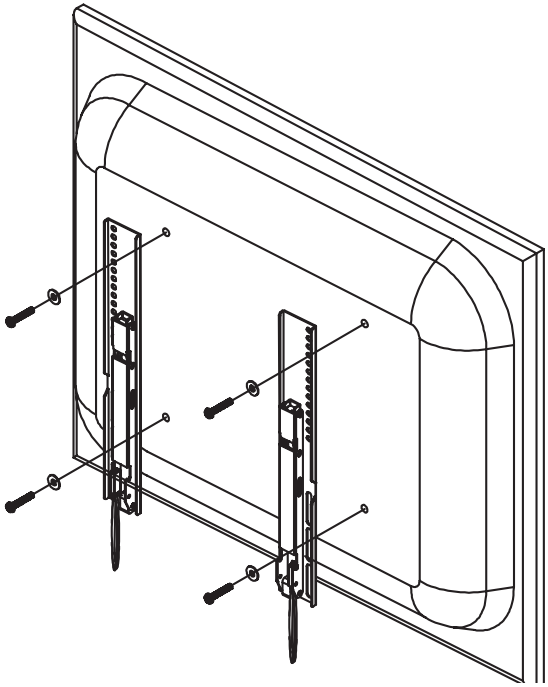

Figure 3 - Attach Brackets to TV

NOTE: Use the proper bolts and washers that correspond to the mounting holes on the back of the TV. Take care to tighten by hand first or damage to the mounting holes can occur. Some TVs without a flat back may require the use of a spacer when attaching the brackets. If applicable, make sure the two TV brackets are even and that they're using the same mounting holes on the bracket. Uneven assembly will cause the TV screen to slant.

INSTALLATION

NOTE: You will need at least 2 people to finish this mounting procedure. To avoid possible injury, do not attempt to mount the TV alone.

Figure 4 - Two Person Install WARNING!

STEP 4

Hang the pre-assembled TV unit on the Wall Plate. Pull down to release the safety catch on both Brackets to attach the assembly to the bottom part of the Wall Plate (Figure 5).

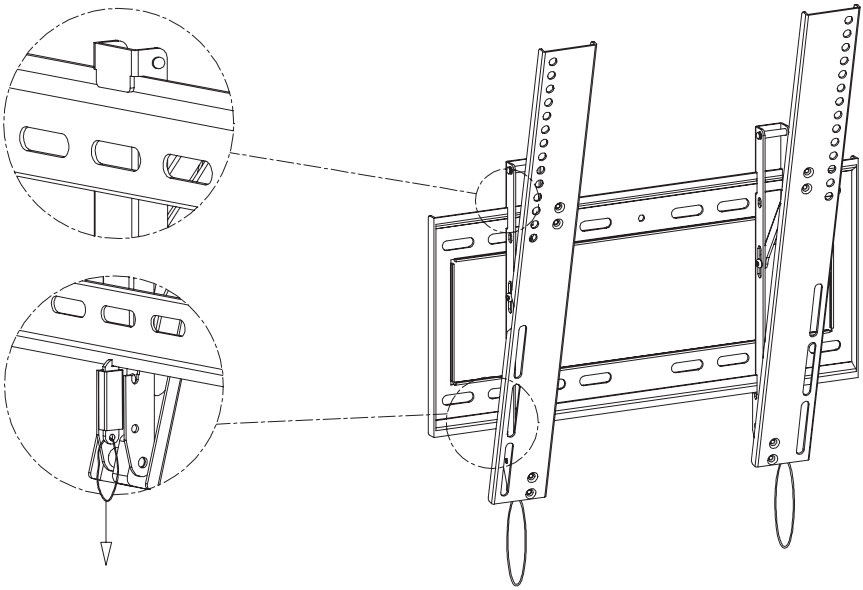

Figure 5 - Attach TV Assembly to Wall Plate

INSTALLATION

STEP 5

Adjust angle by loosening the side screws to allow the Brackets to tilt forward up to 15 degrees (Figure 6). Once the desired tilt angle is achieved, tighten the screws to secure the television in the new position.

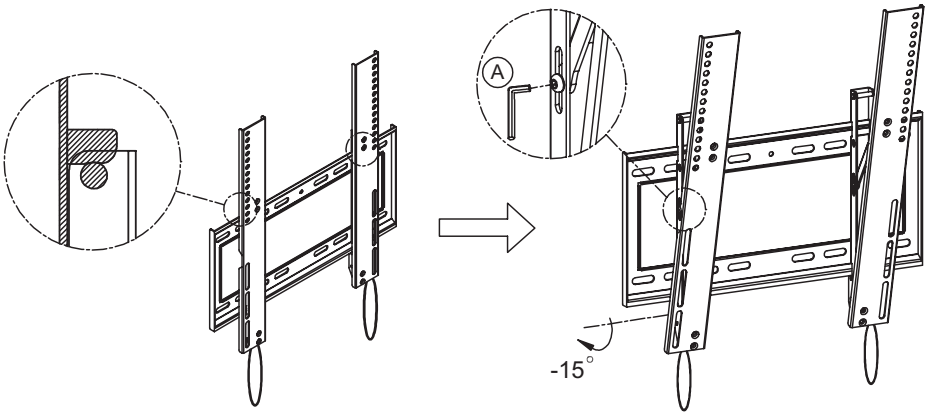

Figure 6 - Adjust Angle

LIMITED WARRANTY

Helios – Audio Mount – Limited Warranty – Valid in the United States and Canada

This 60 month limited warranty is provided by Metra Electronics Corporation for the Metra product identified by the purchaser's registration as indicated below, and there are no other warranties, expressed or implied, except as required by law, including warranties of merchantability and fitness for a specific purpose, that are provided for herein, however all such implied warranties, if any, are limited to the duration of this specific limited product warranty. Some states do not allow limitations on how long an implied warranty lasts, so the above limitations may not apply to you.
Metra Electronics Corporation shall not be liable, under any circumstances, for incidental, indirect, special, and consequential or multiple damages as a result of the sale or use of this product. Some states/countries do not allow the exclusion or limitation of incidental or consequential damages, so the above limitation or exclusion may not apply to you. It is recommended that the purchaser execute the product registration and warranty registration via the web within ten days of purchase.

Limited Product Warranty:
This is a 60 month limited warranty, subject to the conditions, limitations and exclusions identified herein. Metra Electronics Corporation warrants to the original purchaser of the registered or identified product for a period of five years from the date of purchase, that the product shall be free of defects in design, material and workmanship, and subject to the limitations set forth below; Metra Electronics Corporation will repair or replace, at its option, any defective unit. This warranty is applicable only to the original purchaser and is not assignable or transferable. Metra hereby warrants to the original retail purchaser of this product that should this product or any part thereof, under normal use and conditions, prove to be defective in material or workmanship within five years from date of original purchase, such defect(s will be repaired or replaced with reconditioned product (Metra's option) without charge for parts and repair labor. Purchaser must return the product to Metra, return receipt requested or by other means that confirms delivery and Metra shall make the said repairs or replacement within 60 days of receipt. In some instances the product may have been discontinued and cannot be replaced, or repaired. In that instance Metra shall in its discretion attempt to replace the product with a substantially similar product in model or design or pay the purchaser a sum for the then fair market value of the price, considering the amount of time since sale, and the use of the product. This Limited Warranty is the original retail purchaser's sole remedy for any and all such defect(s.

Conditions and Limitations:
(1) Proof of purchase is required (i.e. the sales receipt or other proof of payment, such as the bar code and serial number from the shipping box), and
(2) Products must be registered with Metra Electronics by using either the enclosed registration card, or using Metra's online services for registration purposes. Products that have not been registered will not be covered by Metra's extended limited five year warranty, but instead will only be warranted for the terms required by the State of purchase, if any.
(3) Damage caused by accidents, abuse, misuse or modification of the product will render this warranty null and void.
(4) To obtain repairs or replacement under the terms of this warranty, please contact Metra at 1-800-221-0932 or visit www.metra-online.com. You will need to provide proof of purchase (dated receipt showing store where purchased) and product serial number in order to receive warranty service. The purchaser is required to send the product back to Metra Electronics Corp or to a designated repair center and the purchaser is responsible for all charges for shipping and handling.

This Limited Warranty does NOT cover:
Products which have been subject to abuse, accident, alteration, modification, tampering, negligence, misuse, improper installation, lack of reasonable care, unauthorized repair or service, or if the model or serial number has been altered, tampered with, defaced or removed.
Initial installation or the removal and re-installation of product.
(1) Cosmetic damage, damage that occurs in shipment, act of God or natural disaster.
(2) Missing accessories or components.
(3) Products used for any and all commercial purposes.
THE EXTENT OF METRA'S LIABILITY UNDER THIS WARRANTY IS LIMITED TO THE REPAIR OR REPLACEMENT AS PROVIDED ABOVE AND, IN NO EVENT SHALL METRA LIABILITY EXCEED THE PURCHASE PRICE PAID BY THE ORIGINAL RETAIL PURCHASER FOR THE PRODUCT.

Any questions of Notifications regarding this warranty should be addressed to:
Warranty Department, Metra Electronics Corporation
460 Walker Street, Holly Hill, Florida 32117.

THIS WARRANTY IS IN LIEU OF ALL OTHER EXPRESS WARRANTIES OR LIABILITIES. ANY IMPLIED WARRANTIES, INCLUDING ANY IMPLIED WARRANTY OF MERCHANTABILITY, SHALL BE LIMITED TO THE DURATION OF THIS WRITTEN WARRANTY. IN NO EVENT SHALL METRA BE LIABLE FOR ANY CONSEQUENTIAL OR INCIDENTAL DAMAGES FOR BREACH OF THIS OR ANY OTHER WARRANTY EXPRESS OR IMPLIED WHATSOEVER.
No person or representative is authorized to assume for Metra any liability other than expressed herein in connection with the sale of this product. Some jurisdictions do not allow limitations on how long an implied warranty lasts or the exclusion or limitation of incidental or consequential damages so the above limitations or exclusions may not apply to you. This warranty gives you specific legal rights and you may also have other rights, which vary from jurisdiction to jurisdiction.

HELIOS™

©2016 Metra Electronics Corporation, 460 Walker Street, Holly Hill, FL 32117-2699
Specifications are subject to change without notice.
All trademarks are the property of their respective owners.
1-866-839-9187 • www.metrahometheater.com