HELIOS™

Assembly Instructions

CS-LP44E (M) / CS-LP64E (L)

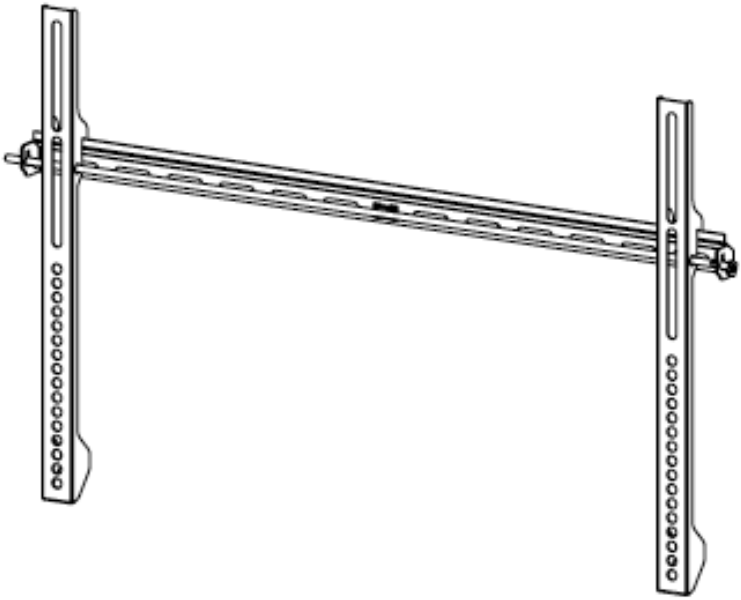

- Please read these instructions carefully before using.
- Max screen size: 55” (M) / 70” (L)
- Load capacity: 100 lbs/60kg (M) : 150 lbs/68kg (L)

TOOLS NEEDED
Herramientas Necesarias
Outils Requis

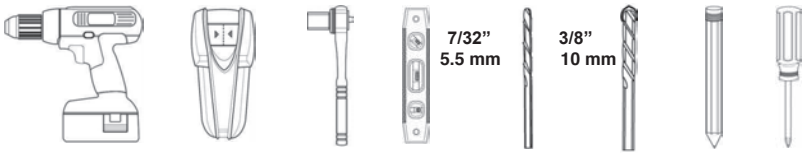

SYMBOLS

Drill Agujerear Percer

Level Nivel Niveau

Socket Wrench Llave española Clé ouverte

Caution Precaución Attention

Tighten Ajustar Serrer

Pencil Mark Marque con lápiz Marque de crayon

Screwdriver Destornillador Tournevis

Heavy! Tres Lourd! !Pesado!

HARDWARE PART NUMBERS

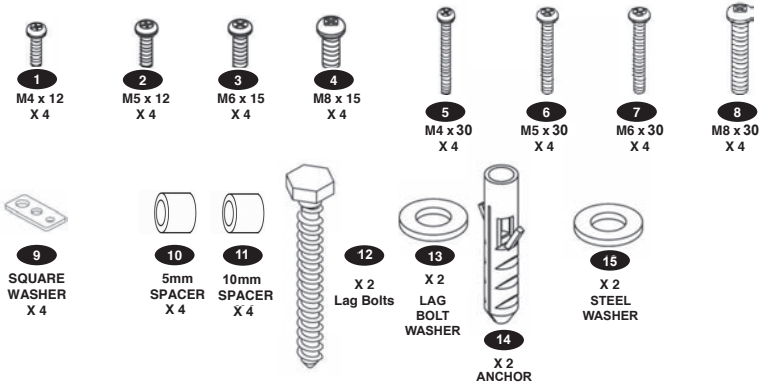

PRODUCT COMPONENT PARTS

Universal Adapter Range (W x H)
Minimum: 100mm x 100mm (Medium and Large)
Maximum: 400mm x 400mm (Medium)
Maximum: 600mm x 400mm (Large)

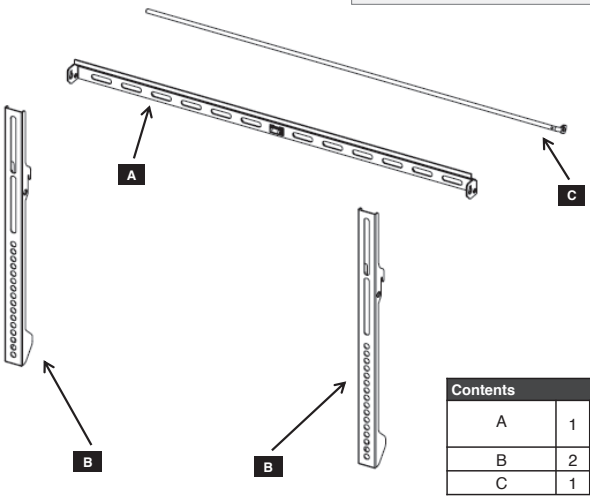

Contents		
A	1	Wall Plate (Bubble Level included)
B	2	Vertical Rails
C	1	Locking Bar

Safety Warning

Thank you for selecting this Helios mount for your installation.
Before starting your installation please read and understand all of the directions.

If you are unsure or have any doubts about the installation please contact an installation professional or Helios customer support.

- Check the packing list and boxed products carefully to verify that there are no missing and/or damaged parts.
- Never use damaged or incorrect parts to do your installation as that may cause property damage or personal injury.
- Our customer service can quickly assist you with installation questions or parts request.
- Do not use this Helios mount for any purpose other than that specified by Helios. Helios is not liable for damage or injury caused by incorrect assembly, mounting or use.

Helios customer support:
Hours: Monday – Friday, 9 AM to 6 PM
Phone Number: (866) 839-9187
Email: support@audiosolutions.com

Installation and Mounting Directions

STEP 1- FLAT BACK FLAT PANEL

Connect vertical rail to flat panel
Conecte el adaptador al monitor
Connectez l'adaptateur au moniteur

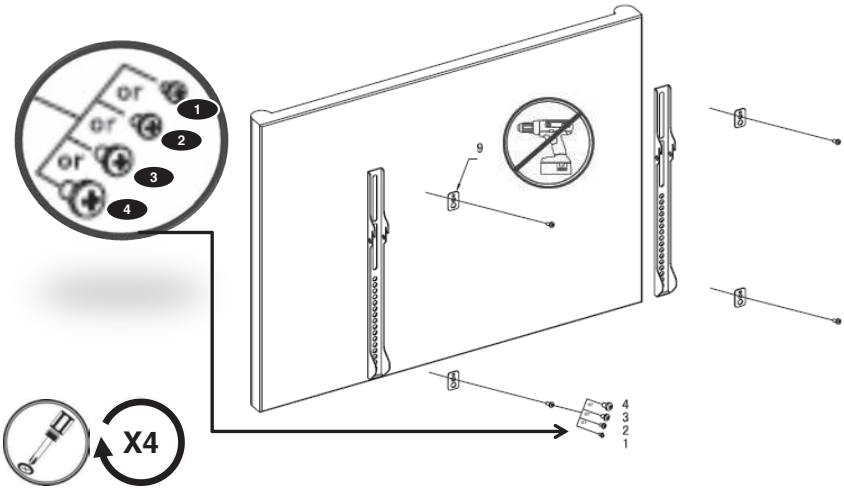

Installation and Mounting Directions

STEP 1- CURVED BACK FLAT PANEL

Connect vertical rail to flat panel

Conecte el adaptador al monitor

Connectez l'adaptateur au moniteur

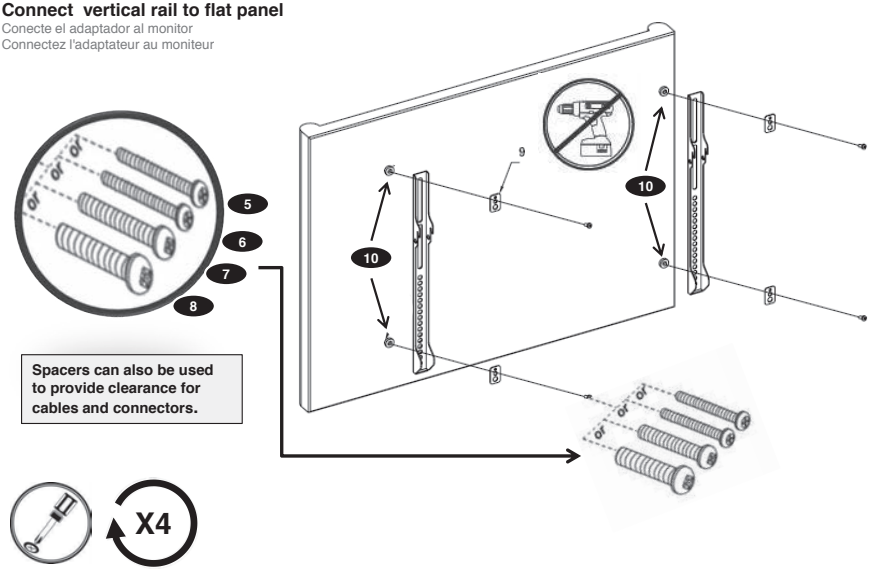

STEP 2A- WOOD STUD INSTALLATION (CONCRETE INSTALLATION SKIP TO 2B)

Find stud and mark edge and center locations

Ubique el panel y marque las ubicaciones de los bordes y el centro.

Repérez l'emplacement d'une poutre, puis marquez l'emplacement des bords et du centre de cette poutre.

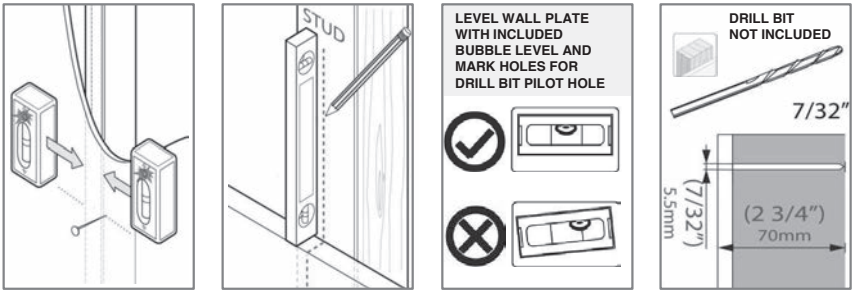

Installation and Mounting Directions

STEP 2A – DRILL PILOT HOLE

Drill pilot hole
Realice el agujero piloto
Percez le trou de guidage

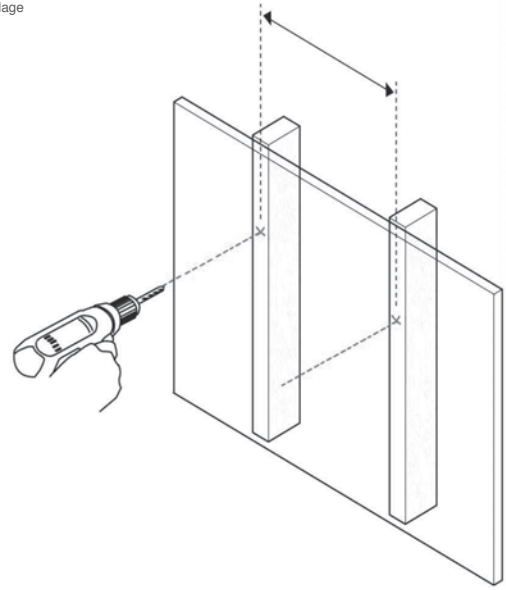

Wood Stud
Panel de madera
Poutre de bois

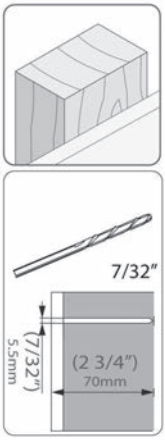

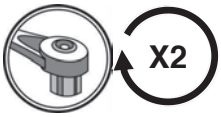

STEP 2A - WOOD STUD INSTALLATION CONTINUED

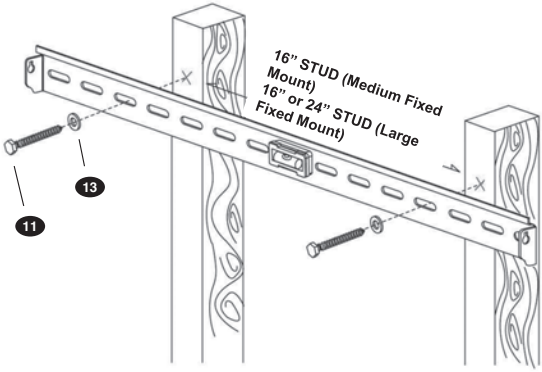

Installation and Mounting Directions

STEP 2A –MOUNT WALL PLATE

Mount wall plate
Coloque la placa de pared
Montez la plaque murale

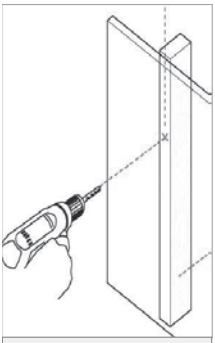

Secure lag bolts with steel washer to Wall Plate

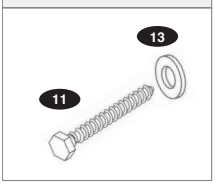

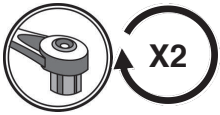

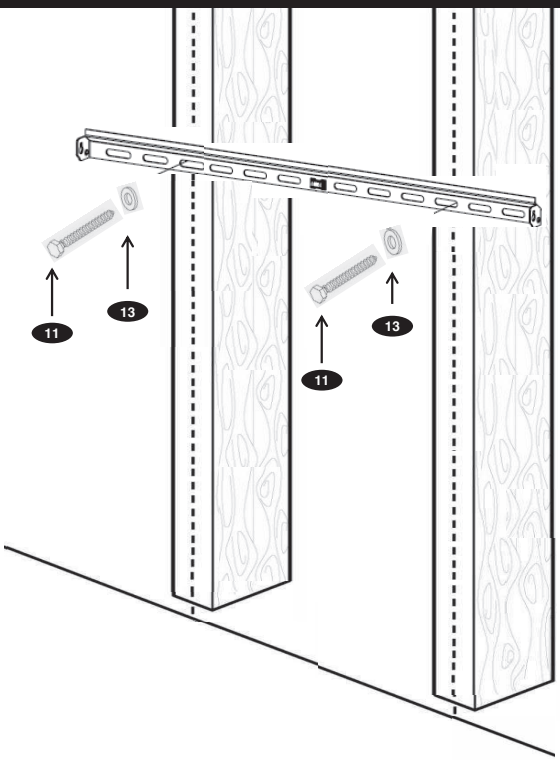

STEP 2B –SOLID CONCRETE INSTALLATION

Use wall plate to mark mounting locations/ drill pilot holes
Use la placa de pared para marcar el lugar donde se realizará la instalación
Utilisez la plaque murale pour marquer l'emplacement de montage

Solid Concrete
Concreto sólido
Béton massif

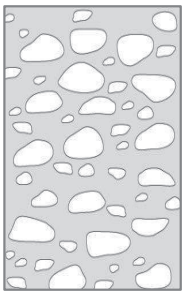

Drill Bit
S. broca
Foret

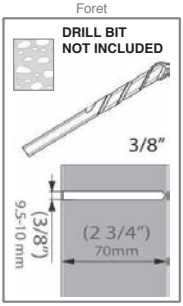

Level
Nivelado
Level

Drill pilot hole
Realice el agujero piloto
Percez le trou de guidage

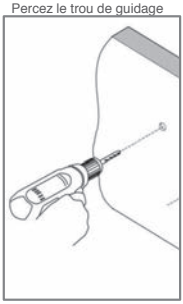

Installation and Mounting Directions

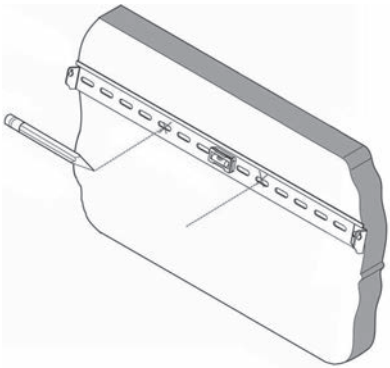

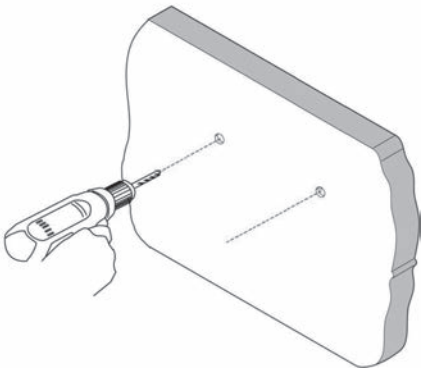

STEP 2B –SOLID CONCRETE CONTINUED

Mount wall plate
Coloque la placa de pared
Montez la plaque murale

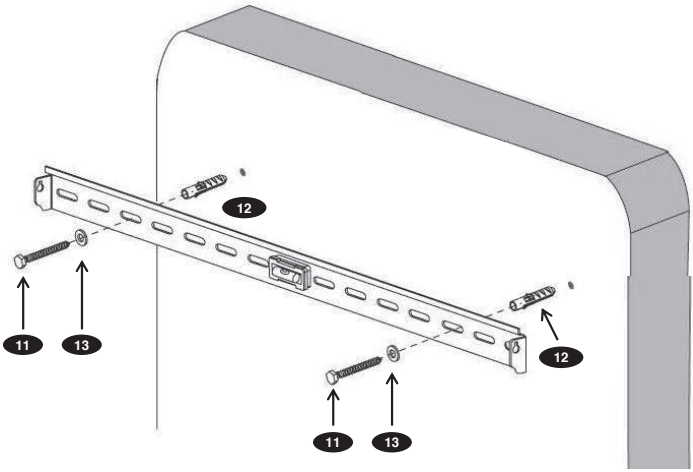

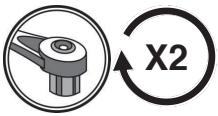

Installation and Mounting Directions

STEP 3

Hang vertical rails with monitor attached
Cuelgue con el monitor adherido.
Accrochez avec le moniteur installé.

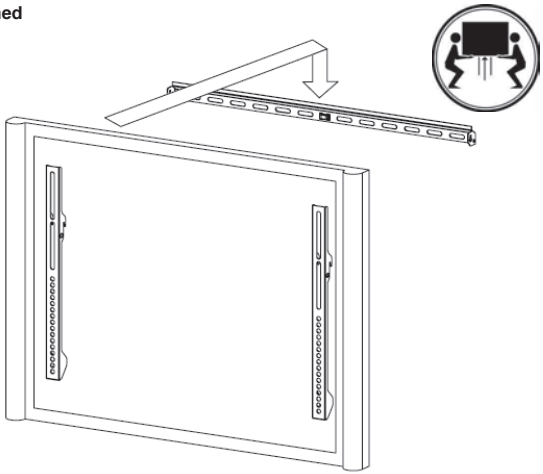

Heavy, Assistance Required

TRES LOURD ! Cette etape requiert deux personnes

!PESADO! Necesitara ayuda para realizar esta operacion

STEP 4

Locking mechanism
Mecanismo de fijación
Mécanisme de verrouillage

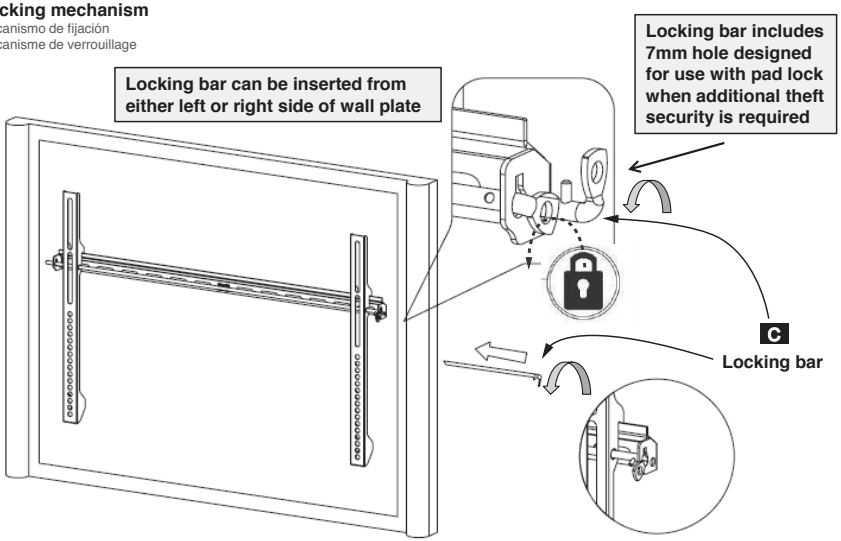

HELIOS™ MetraHOME THEATER GROUP

1-866-839-9187
www.metrahometheater.com

©2016 Metra Electronics Corporation, 460 Walker Street, Holly Hill, FL 32117-2699
Specifications are subject to change without notice.
All trademarks are the property of their respective owners.