18Gbps HDMI over HDBaseT Extender with Bi-directional IR (150M)

Model: CS-HDBT2UR-120

User Manual

ethereal

EtherealPro.com

386-255-0234

460 Walker Street
Holly Hill, FL 32117-2653

©2023 Ethereal

Thank you for purchasing this product

For optimum performance and safety, please read these instructions carefully before connecting, operating or adjusting this product. Please keep this manual for future reference.

Surge protection device recommended

This product contains sensitive electrical components that may be damaged by electrical spikes, surges, electric shock, lighting strikes, etc. Use of surge protection systems is highly recommended in order to protect and extend the life of your equipment.

Table of Contents

1. Introduction.....1
2. Features.....1
3. Package Contents.....2
4. Specifications.....2
5. Operation Controls and Functions.....4
   5.1 Transmitter Panel.....4
   5.2 Receiver Panel.....5
   5.3 IR Pin Definition.....6
6. Application Example.....8

1. Introduction

This 18Gbps HDMI Extender can extend high definition video / audio signal, RS-232, bi-directional IR, and the distance is up to 492ft / 150 meters for 1080p & 394ft / 120 meters for 4K between transmitter and receiver via a single CAT cable. It supports resolution up to 4K2K@60Hz 4:4:4, 18Gbps and HDCP 2.2. One HDMI loop port is available for output. It also supports de-embeded audio for L/R audio output and PoC function. In addition, the extender is equipped with two-way IR pass-through which allows for source and display control.

This HDMI extender includes two units: transmitter unit and receiver unit. The transmitter unit is responsible for capturing HDMI input signal and carries the signal via one cost effective Cat5e/6 cable, and transmitting / emitting IR control signals. The receiver unit is responsible for receiving the HDMI signal and transmitting / emitting IR control signal.

The extender offers the most convenient solution for HDMI extension via a single Cat5e/6 with long distance capability, and is the perfect solution for any application.

2. Features

☆ HDMI 2.0, HDCP 2.2 / HDCP 1.4 and DVI 1.0 compliant
☆ Supports 18Gbps bandwidth
☆ Input and output extends distance up to 394ft / 120 meters when 4K signal and 492ft / 150 meters when 1080P signal
☆ Supports one HDMI loop output on transmitter
☆ De-embeded audio to analog stereo output on receiver
☆ With bi-directional IR, RS-232 and CEC pass-through
☆ HDR, HDR10+, Dolby Vision and HLG function supported
☆ Supports PoC (Power over Cable)
☆ Compact design for easy and flexible installation.

3. Package Contents

Qty	Item
1	18Gbps HDMI over HDBaseT Extender (Transmitter)
1	18Gbps HDMI over HDBaseT Extender (Receiver)
2	IR Blaster cable (1.5 meters)
2	20~60KHz IR Receiver cable (1.5 meters)
4	Mounting Ears
2	3-pin Phoenix connectors
1	24V/1A Locking Power adapter
1	User Manual

4. Specifications

Technical	
HDMI Compliance	HDMI 2.0
HDCP Compliance	HDCP 2.2 / HDCP 1.4
Video Bandwidth	18Gbps
Video Resolution	4K2K 50/60Hz 4:4:4 4K2K 50/60Hz 4:2:2 4K2K 50/60Hz 4:2:0 4K2K 30Hz 4:4:4 1080p, 1080i, 720p, 720i, 480p, 480i All HDMI 3D TV formats All PC resolutions including 1920 x 1200
Color Space	RGB / YCbCr 4:4:4, YCbCr 4:2:2, YCbCr 4:2:0
Color Depth	8/10/12-bit (1080P60Hz, 4K30Hz, 4K60Hz YCbCr 4:2:2/4:2:0) 8-bit (4K60Hz 4:4:4)
HDMI Audio Formats	LPCM 2.0/2.1/5.1/6.1/7.1, Dolby Digital, Dolby TrueHD, Dolby Digital Plus(DD+), DTS-ES, DTS HD Master, DTS HD-HRA, DTS-X
L/R Audio Formats	PCM 2.0
ESD Protection	Human body model — ±8kV (Air-gap discharge) & ±4kV (Contact discharge)

Connections	
Transmitter	Inputs: 1x HDMI Type A [19-pin female] 1x SERVICE [Mini-USB, Update port] Outputs: 1x HDMI Type A [19-pin female] 1x HDBT OUT [RJ45, 8-pin female] Control: 1x IR IN [3.5mm Stereo Mini-jack] 1x IR OUT [3.5mm Stereo Mini-jack] 1x RS-232 [Phoenix jack]
Receiver	Inputs: 1x HDBT IN [RJ45, 8-pin female] 1x SERVICE [Mini-USB, Update port] Outputs: 1x HDMI Type A [19-pin female] 1x AUDIO OUT [3.5mm Stereo Mini-jack] Control: 1x IR IN [3.5mm Stereo Mini-jack] 1x IR OUT [3.5mm Stereo Mini-jack] 1x RS-232 [Phoenix jack]
Mechanical	
Housing	Metal Enclosure
Color	Black
Dimensions	Transmitter / Receiver: 140mm [W] x 65mm [D] x 18mm [H]
Weight	Transmitter: 160g, Receiver: 155g
Power Supply	Input: AC 100 - 240V 50/60Hz Output: DC 24V/1A (Locking connector)
Power Consumption	9.36 W
Operating Temperature	32 - 104°F / 0 - 40°C
Storage Temperature	-4 - 140°F / -20 - 60°C
Relative Humidity	20 - 90% RH (no condensation)

Resolution / Distance			
4K	394ft / 120M		
1080P	492ft / 150M		
Resolution / Cable Length	**4K60 - Feet / Meters**	**4K30 - Feet / Meters**	**1080P60 - Feet / Meters**
HDMI IN / OUT	10ft / 3M	30ft / 10M	50ft / 15M
The use of Ethereal High Speed HDMI cable is highly recommended.			

5. Operation Controls and Functions

5.1 Transmitter Panel

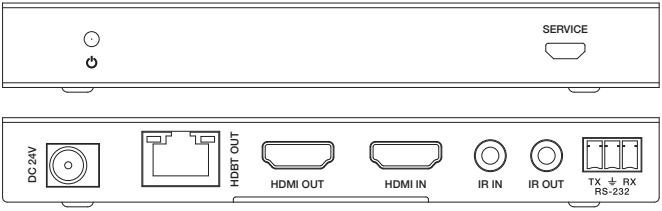

Name	Function description
Power LED	Red LED indicates when the transmitter is powered.
SERVICE port	Firmware update port.
DC 24V	DC 24V input for 24V 1A power adapter. *Note that the extender supports PoC function, it means that either transmitter or receiver is powered supply by 24V/1A power adapter, the other doesn't need power supply.*
HDBT OUT	RJ45 connector for connecting the HDBT IN port of receiver with CAT 5e/6 cable.
Connection Signal Indicator lamp *(on the left side of the HDBT OUT port)*	▪ Illuminate: Transmitter and Receiver are in good connection status. ▪ Flashing: Transmitter and Receiver are in poor connection status. ▪ Dark: Transmitter and Receiver are not connected.
Data Signal Indicator lamp *(on the right side of the HDBT OUT port)*	▪ Illuminate: HDMI signal with HDCP. ▪ Flashing: HDMI signal without HDCP. ▪ Dark: No HDMI signal.
HDMI OUT	HDMI loop output for display.
HDMI IN	HDMI source input.
IR IN	IR port input for receiving the signal of IR remote.
IR OUT	IR port output for control of source device. This IR output signal is from IR IN port of receiver.

RS-232	3-pin pluggable connector for RS-232 command tranmission. The RS-232 command will pass-through from transmitter to receiver or receiver to transmitter.

5.2 Receiver Panel

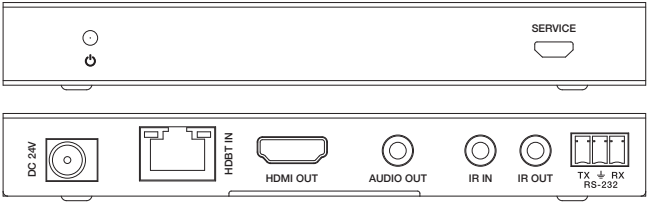

Name	Function description
Power LED	Red LED indicates when the receiver is powered.
SERVICE port	Firmware update port.
DC 24V	DC 24V input for 24V 1A power adapter. *Note that the extender supports PoC function, it means that either transmitter or receiver is powered supply by 24V/1A power adapter, the other doesn't need power supply.*
HDBT IN	RJ45 connector for connecting the HDBT OUT port of transmitter with CAT 5e/6 cable.
Connection Signal Indicator lamp *(on the left side of the HDBT IN port)*	▪ Illuminate: Transmitter and Receiver are in good connection status. ▪ Flashing: Transmitter and Receiver are in poor connection status. ▪ Dark: Transmitter and Receiver are not connected.
Data Signal Indicator *(on the right side of the HDBT IN port)*	▪ Illuminate: HDMI signal with HDCP. ▪ Flashing: HDMI signal without HDCP. ▪ Dark: No HDMI signal.
HDMI OUT	HDMI output for display.
AUDIO OUT	3.5mm stereo connector for analog audio output.

IR IN	IR port input for receiving the signal of IR remote.
IR OUT	IR port output for control of display device. This IR output signal is from IR IN port of transmitter.
RS-232	3-pin pluggable connector for RS-232 command tranmission. The RS-232 command will pass-through from transmitter to receiver or receiver to transmitter.

5.3 IR Pin Definition

IR Receiver and Emitter pin's definition as below:

IR RECEIVER

IR EMITTER

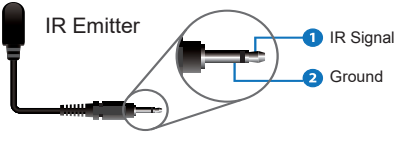

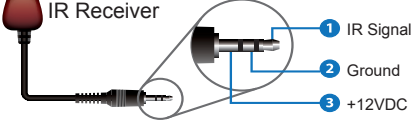

The following is IR system diagram about IR cable use method.

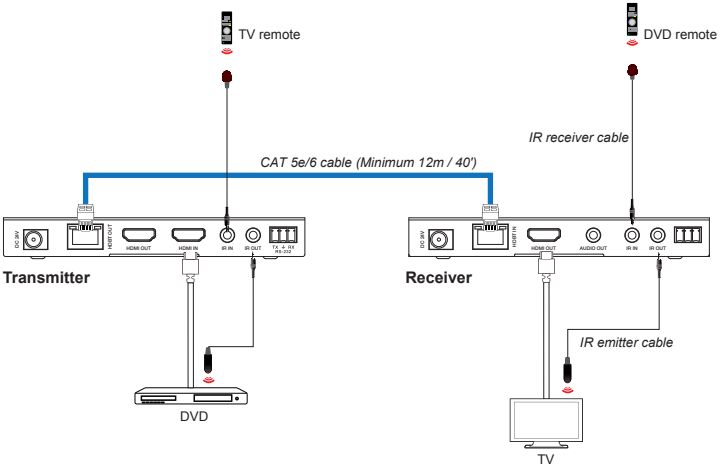

Note that IR remote sends signal distance for 0~5 meters / 0~8 meters, and angle is plus-minus 45 degrees / vertical direction .
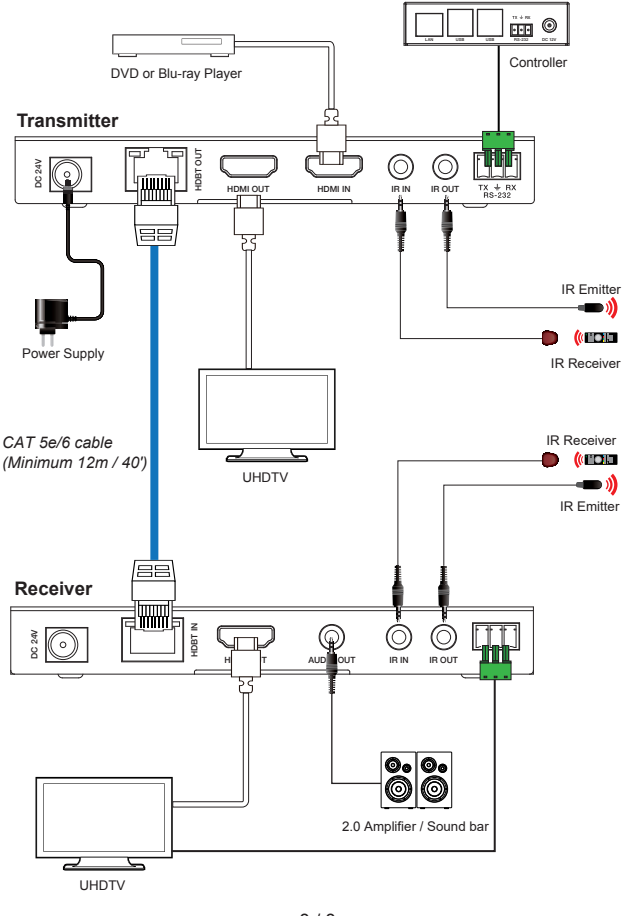
6. Application Example