HELIOS®

Assembly Instructions

LP64PL

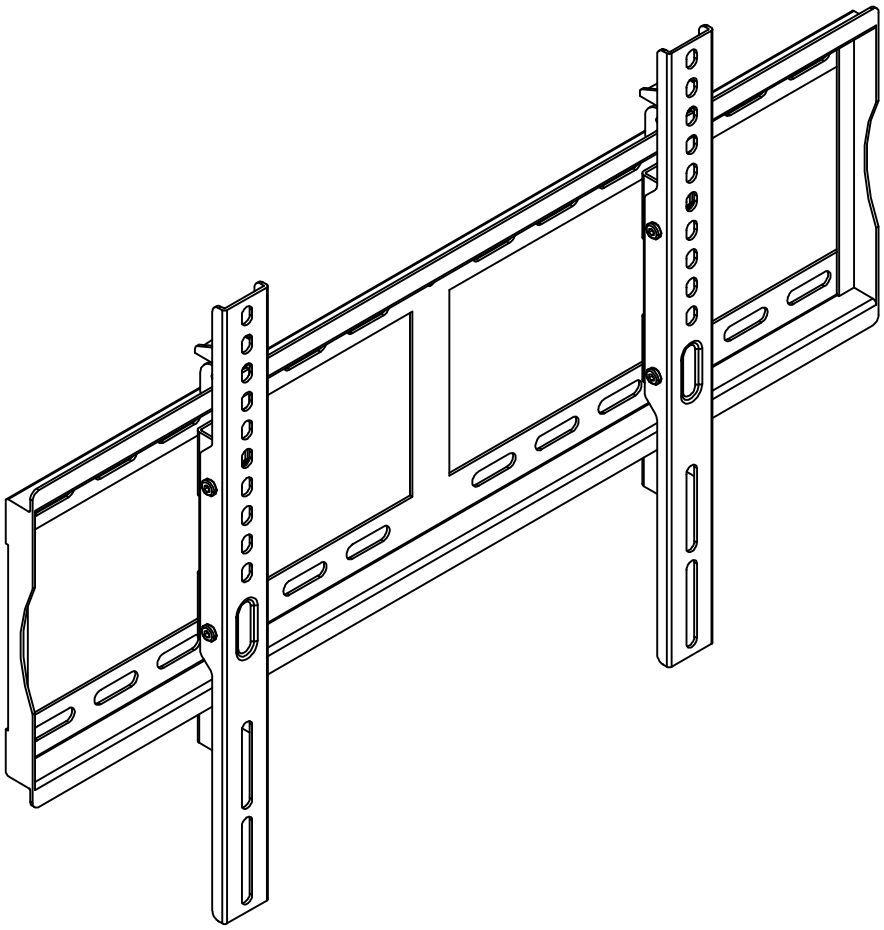

- Please read these instructions carefully before using.
- This model will hold most 32-84 Flat Panel TVs.
- Load capacity: 60kg (132Lbs).

LP64PL Safety

Safety Warning: Thank you for selecting the Helios LP64PL for your installation. Before starting your installation please read and understand all of the directions, if you are unsure or have any doubts about the installation please contact an installation professional or Helios customer support. Please check carefully to verify that there are no missing and/or damaged parts. Never use damaged parts to do your installation as that may cause property damage or injury. Our customer service can quickly assist you with installation questions or parts request. Do not use the Helios LP64PL for any purpose other than that specified by Helios. Helios is not liable for damage or injury caused by incorrect assembly, mounting or use.

.

- Supplied Parts and Hardware: Some parts not shown at same scale

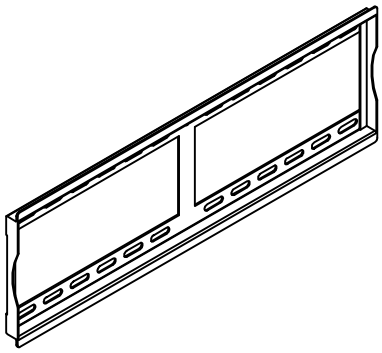

A--Wall plate 1pc

B--Bracket 2pcs

- Mounting Hardware:

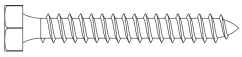		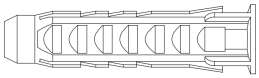
01-- M8x60mm Lag Bolt 4pcs	02--M8 washer 4pcs	03--Wall Anchor 4pcs

- Hardware for TV assembly：

		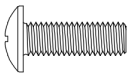		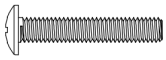	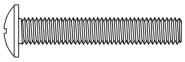
a--M4X12 bolt 4pcs	b--M6X12 bolt 4pcs	c--M8X25 bolt 4pcs	d--M4X30 bolt 4pcs	e--M6X35 bolt 4pcs	f--M8X50 bolt 4pcs

g--M6x17mm spacer 4pcs	h--M8x22mm spacer 4pcs	i--10mm spacer 4pcs	j--2.5mm spacer 8pcs	k--M4 Washers 4pcs	l--M6 Washers 4pcs

Installation and Mounting Directions:

Step 1：Read manual completely and understand all of the directions prior to starting the installation. Use (model number) only as described in the directions. .

Step 2: Mount the Wall Plate (A) to the wall.
Drywall with Stud mounting;
Concrete Block & Brick mounting; The Wall Plate (A) must be mounted directly to Solid Concrete, Concrete Block or Brick. Do NOT mount to Mortar joints or hollow wall sections. Once you have located the correct location for the installation, hold the Wall Plate (A) in position against the wall, verify with a level and mark the bolt location for each lag. Next drill 3/16” diameter, 1.25” deep hole at the four marked locations. Using 3/16” x 1.25” Hex Head Concrete screws attach the Wall Plate (A) onto the wall with the supplied lags bolts, level and tighten the lags until Wall Plate (A) is secured.

⚠ Note: Be sure to choose a high quality wall area and enough strong to hole the weight of the TV and wall mount itself perennially when assembling. The assembly place should be far away from the water and sunshine .

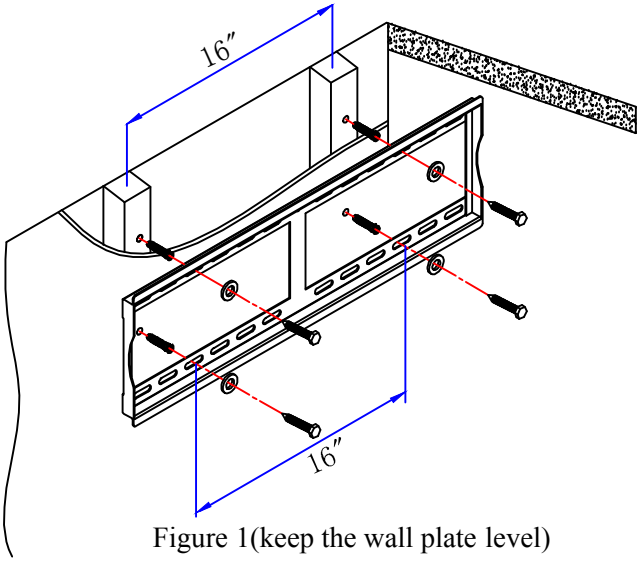

Figure 1(keep the wall plate level)

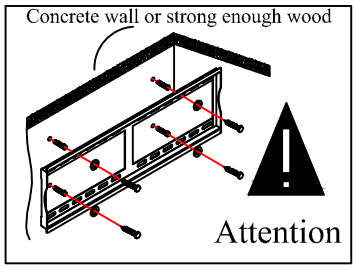

Figure 2

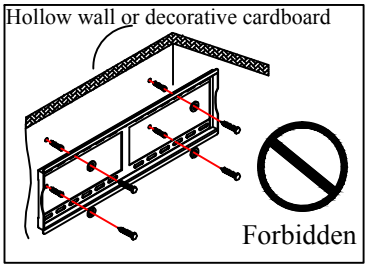

Figure 3

Step 3: Attach two brackets (B) to TV back.

Attach two brackets (B) to the VESA receptacle's on the back of the display (Figure 4).
Please use the correct screw and washer for the holes on the back of your display, using the incorrect screw will cause damage to the display. Note that uneven assembly will cause a slanted screen.

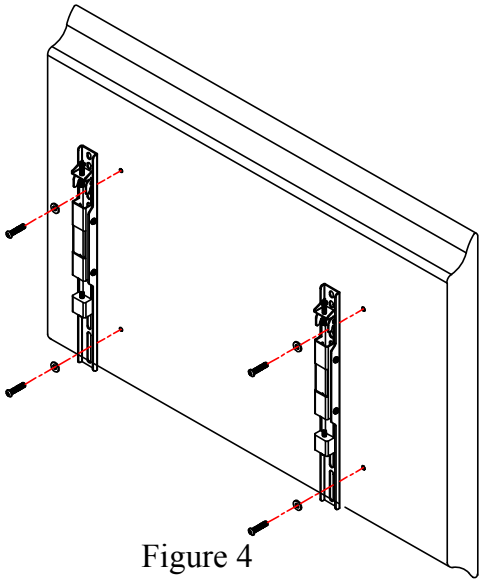
Figure 4

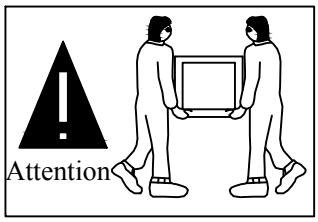

Figure 5

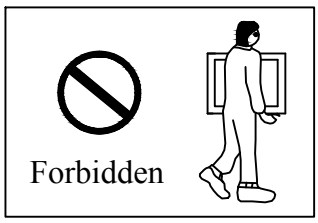

Figure 6

▲ **Note:** 1.Please use the corresponding screw & washer for the holes of the TV back, assembling with incorrect screw & washer will damage the holes on the TV back, uneven assembly will cause slanted TV screen

2. Professional knowledge required to assemble the flat panel TV and the wall mount and need at least 2 people to finish this mounting procedure (Figure 5), Do not attempt to assemble this wall mount independently to avoid incorrect assembly or any possible injury this may cause.

Step 4: Hang assembled display on the Wall Plate (A).

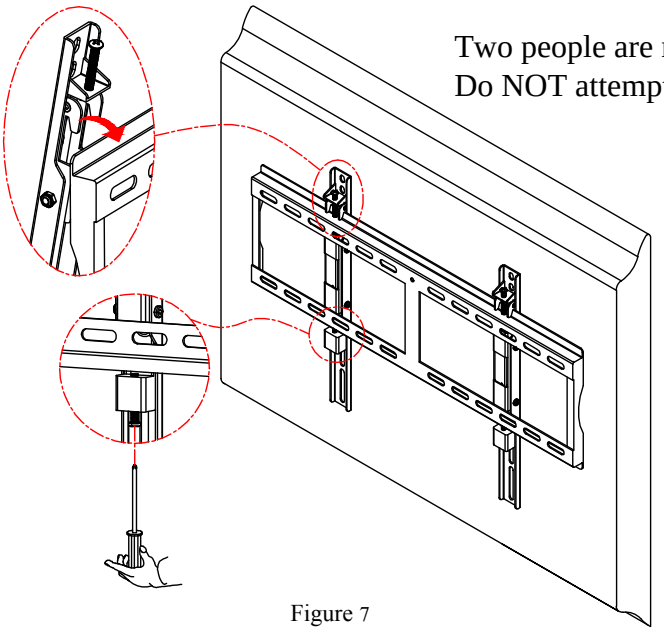

Two people are required for this portion of the installation. Do NOT attempt to do this part of the installation alone

Figure 7

▲ **Note: This step must require 2 or more professional to finish.**

Step 5: Once the display is in position (A) tighten the safety screws on the bottom of each Vertical Arm

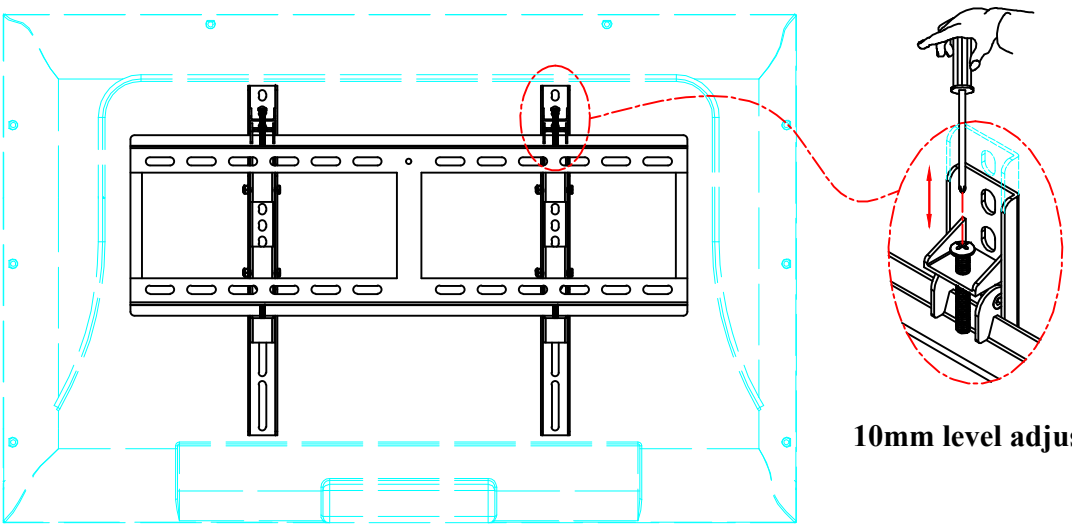

10mm level adjustment

Step 6: Post Installation leveling of the display.
Turn the screws located at the top of each vertical arm to provide up to 10mm of height adjustment.

ethereal
EtherealPro.com
386-255-0234
460 Walker Street, Holly Hill, FL
32117-2653 ©2023 Ethereal