HELIOS®

AS-SPKR-11

MetraAV™ THE INTEGRATOR'S CHOICE

MetraAV.com
386-255-0234

460 Walker Street
Holly Hill, FL 32117-2653
©2021 Metra Electronics Corporation

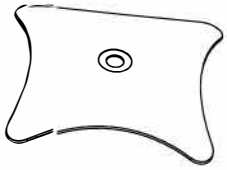	Ⓐ Metal base	2
	Ⓑ Tube with twist-lock	2
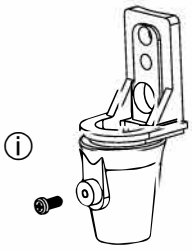	ⓗ Universal Bracket With remaining screw	2
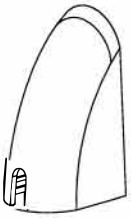	ⓚ Universal Bracket cover	2
	ⓞ M5X12 SCREW	4
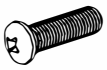	ⓟ M5X18 SCREW	4
	ⓠ M4X20 SCREW	2
	ⓡ M5 WASHER	4
	ⓢ M4 WASHER	4
	ⓣ THUMB NUT	2
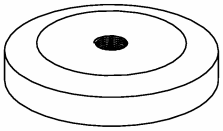	ⓤ HOLDER	2
	ⓥ NUT	2

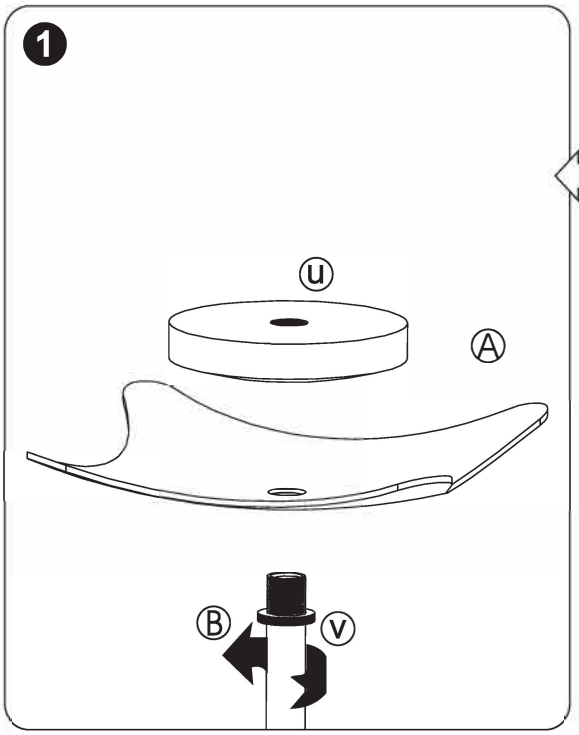

Insert assembled tube (B) into base (A) and screw on holder.
To achieve anti-clockwise to release the sliding tube mechanism. Adjust to the required height and turn twist lock clockwise to lock pole in position.

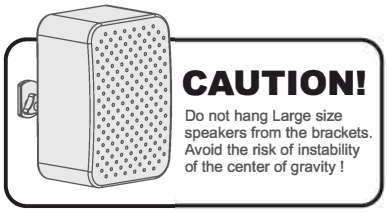

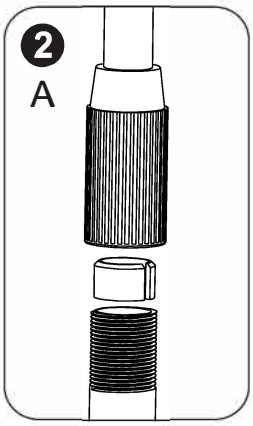

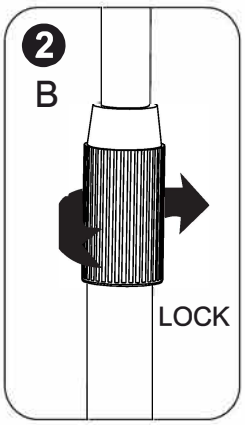

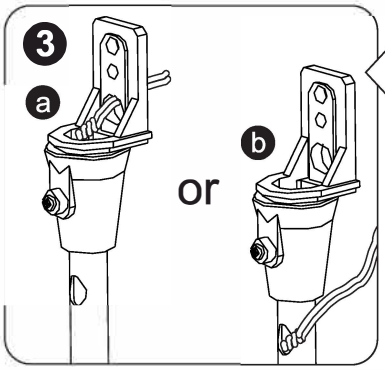

FOR LOUDSPEAKERS WITH KEYHOLE TYPE FIXING
Secure universal bracket(h)to upright pole using screw(i). The speaker cable should be threaded through pole and bracket as shown in fig 3a. Or 3b.
Assemble thumbnut(t)washers(s)and M4 screw(q)as shown. Attach speaker - if required tighten thumbnut. Install bracket cover cap(k)if required.

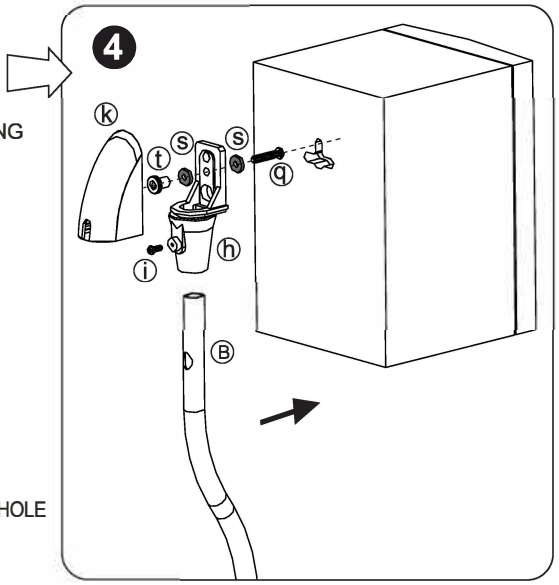

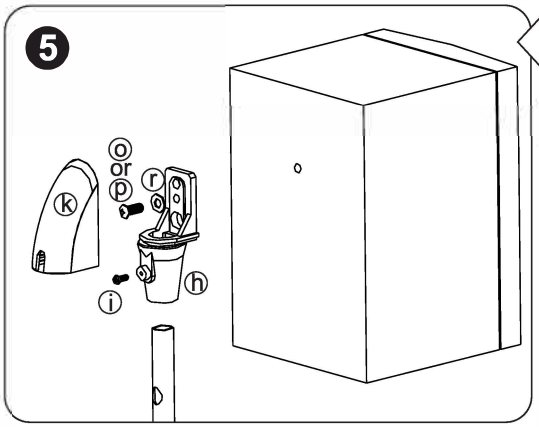

FOR LOUDSPEAKERS WITH THREADED HOLE
Secure universal bracket(h)to upright using screw(i). The speaker cable should be Connected to the speaker and threaded through the upright as shown in fig 3a or 3b.
The speaker should be fixed to bracket (h) Using washer(r)and either screw(o) or (p) depending on speaker type, Fit cover cap (k) if required.

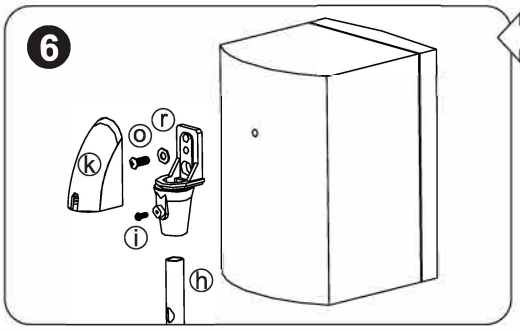
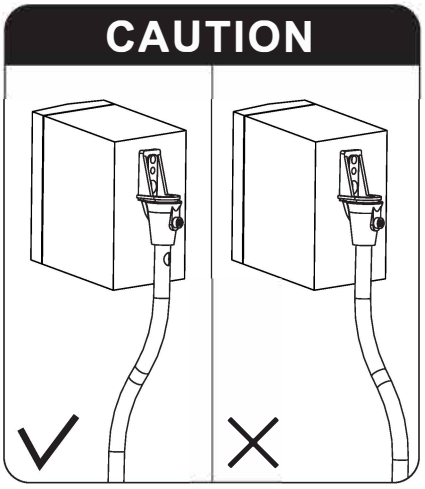
BOSE ACOUSTIMASS LOUDSPEAKERS
Attach universal bracket(h) to pole using screw (i)
Feed cable down pole as shown in fig 3a or 3b.
Attach loudspeaker to bracKet using screw (o) and washers (r).
If required attach universal cover cap (k).